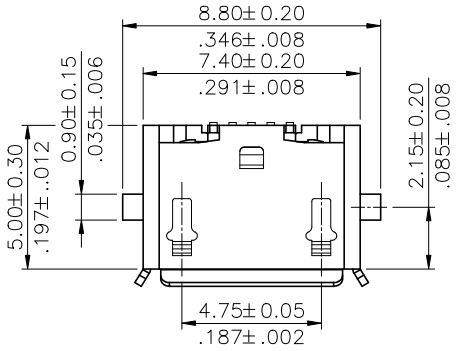

Materials :

* Insulation: LCP UL 94V-0
* Contacts: Copper Alloy
* Shell: SUS

Electrical

* 2.5 Amps (max)shall be applied to Vbus pin and its corresponding GND pin.

Ordering Code:

CU09	S	2	M	1	5	C	0
①	②	③	④	⑤	⑥	⑦	⑧

① Series No.
② S= Socket
③ Plating option:
2= Gold flash plated over 1.27μm(50μ") Nickel
④ Tail style: M= SMT Type
⑤ Insulator Color: 1= Black
⑥ No of Circuits: 5= 5 Pin
⑦ Type: C= Micro USB 5 Pin Type-AB
⑧ Option: 0= Standard

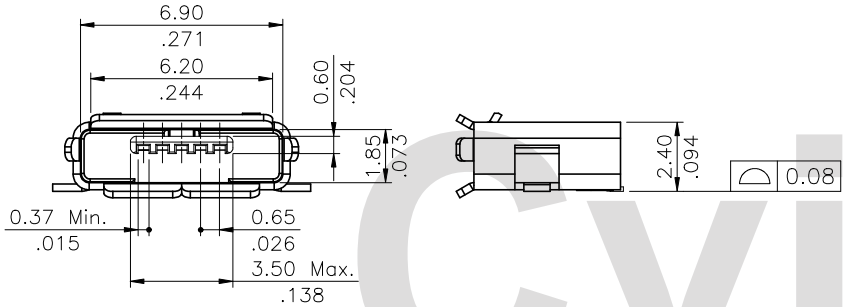

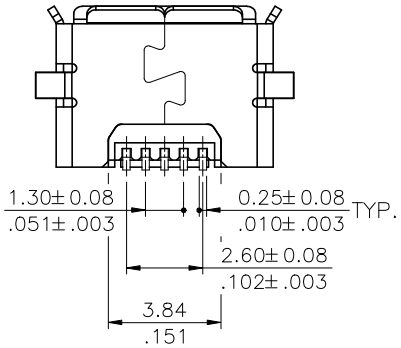

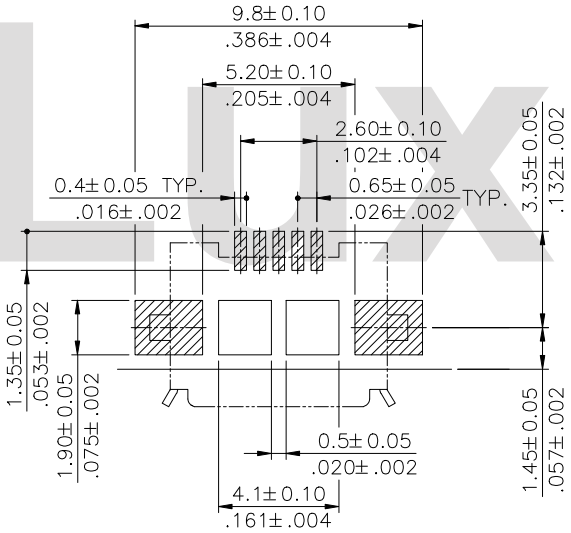

Recommended P.C. Board Layout

Lead Free Process

RoHS Compliant

CviLux

SYM	NAME	DATE	REVISIONS
4			
3			
2			
1			

CVILUX CORP. 2010.10.01 ISSUED

		DATE
DRAWN BY:	Karen	10/01-10'
ENGINEER:	Eisley	10/01-10'
CHECKED BY:	David	10/01-10'
APPROVED BY:	David	10/01-10'

UNIT: mm / inch

TOLERANCE UNLESS OTHERWISE SPECIFIED

.X ± 0.20/.008	X.° ± 1°
.XX ± 0.10/.004	.X° ±
.XXX ± 0.05/.002	.XX° ±

TITLE: MICRO USB 5 PIN SMT BOARD MOUNT CONNECTOR (AB TYPE)

MATERIAL:

FINISH:

瀚荃股份有限公司
CviLux Corporation

DRAWING NO.	CU0904SA	PART NO.	CU09S2M15C0
SCALE	4 / 1	SHEET 1 OF 1	